REVISIONS						
ZONE	LTR.	DESCRIPTION	ECN NO.	DATE	BY	APPR'D
	A	RELEASED FOR PRODUCTION	DR00990	4/2/03	DPZ	DLT
1A 3B,3A	B	B1 TU121 WAS FM0000344 B2 REW'D DIM'S & ADDED NOTES	72363	26JAN10	SLK	CFH

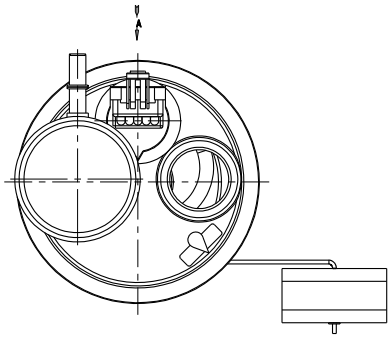

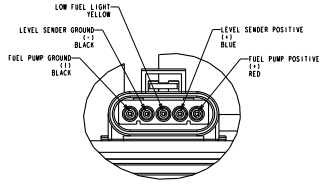

VIEW A
E-CONN
PIN OUT
SCALE 2:1

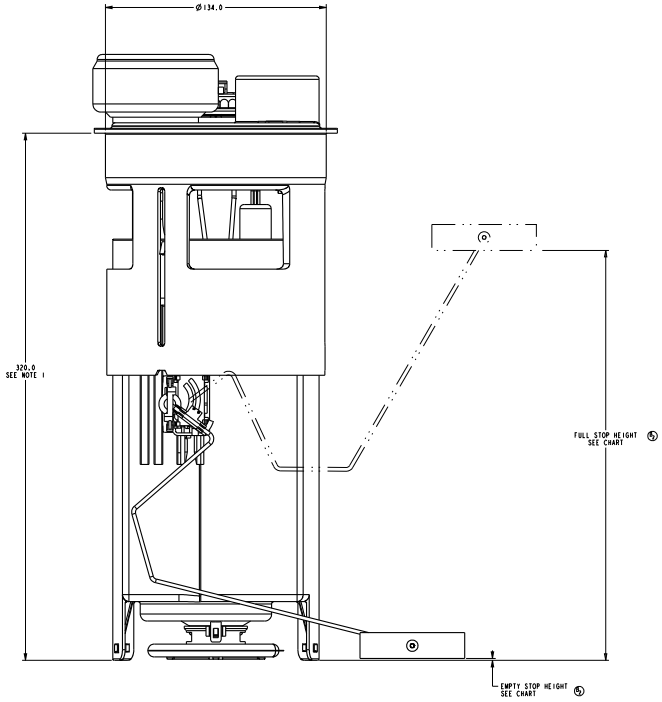

POINT	FLOAT HEIGHT	RESISTANCE (OHMS)
FULL STOP	249.2	5±3
EMPTY STOP	0.0	102±3

NOTES:

1. FUEL MODULE IS SHOWN IN INSTALLED POSITION. TRAVEL FROM THIS POSITION IS ±25mm.
2. THIS UNIT REPLACES CHRYSLER OEM P/N 52017635

THIS DRAWING IS THE PROPERTY OF TI AUTOMOTIVE. IT IS SUBMITTED IN CONFIDENCE AND MUST NOT BE REPRODUCED OR COPIED, NOR MAY THE INFORMATION CONTAINED HEREIN BE USED FOR ANY PURPOSE OTHER THAN THE PERFORMANCE OF THE ORDER OR CONTRACT TO WHICH IT PERTAINS. IT MUST BE RETURNED AT THE REQUEST OF TI AUTOMOTIVE OR UPON COMPLETION OF THE ORDER OR CONTRACT.

◊ DENOTES ASSEMBLY/TEST/PROCESS
◊ DENOTES SAFETY CHARACTERISTIC
◊ DENOTES SIGNIFICANT CHARACTERISTIC

INTERNAL USE ONLY
DISTRIBUTION CODE
AF

REF: FM0000344

DO NOT SCALE PRINT

DIMENSIONS AND TOLERANCES PER INSTITUTE OF ENGINEERING

PROJECTION

PRO-E

E
SIZE

TI Automotive
AFTERMARKET DIVISION
600 COLUMBIA STREET
CARO, MICHIGAN 48723

TOLERANCE UNLESS OTHERWISE SPECIFIED:
.X ±0.25
.XX ±0.13
.XXX ±0.10
ANGLES ±1.0°
FRACTIONS ±1/64

MATERIAL

FINISH

SCALE: 1:1 DATE: 4/2/03
DRN. BY: D.P.ZBORAY
CHK'D BY: RHM
APPR'D BY: DLT

TITLE
FUEL DELIVERY MODULE

DRAWING NO. FM0000345
REV. B